VDC 3500

Display Type	8" EMF CRT SXGA 5/4 Elektromagnetisch Fokussierte Röhre	
Ansi-Lumen	Projector: 220	Screen: 69 Lux (bei 200 cm Screen)
Contrast	Projector: -	Screen: -
Black Level	Projector: -	Screen: -
Offset	-	
Resolution	SXGA 1280 x 1024 1.310.720 Pixel UXGA 1600 x 1200 compressed	
Video Modes	PAL, PAL-M, PAL-N, PAL-60, SECAM, NTSC, EDTV HDTV 720p, 1080i,	
Application	CRT Projection | Very narrow picture width and rooms with very little light.	
Light Source	CRT Röhre	
Light Life	ca. 10000 - 20000 h. (je nach Anwendung)	
Operating Costs	-	
Focus	-	
Zoom	-	
Objective	HD117-12	
Throw Ratio	-	
Audio	-	
Connections	-	
Ceiling Mounting	-	
Power	-	
Size WxHxD	-	
Operating Noise	-	
Weight	-	
Keystone	-	
Illumination	-	
Frequenz	H-sync: 15-105 kHz V-sync: 40-150 Hz	
Foot-Lamberts	6 fL / max. 126 cm screen width 21 cd/m²	
Features	-	
Status	- Discontinued (EOL) // Last update of the data: 2023-08-04	
Data		

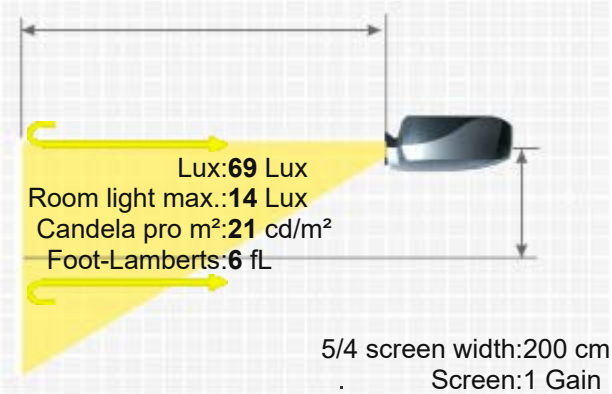

More Details

https://www.projector-database.com/pro/vdc3500-en.html

Due to our ongoing commitment to continuously improve the quality of our projector database, this brochure is also subject to change without notice. HCinema is not responsible for any errors or omissions contained in product descriptions.