Sovboi VB2



Brief Introduction Beta 2.5	With the VB2, manufacturer Sovboi offers an LCD LED projector with HDTV 1920 x 1080 resolution and a contrast of 20000:1. The lifespan of the LEDs is 120000 hours, which is over 82.2 years if enjoyed for four hours a day. Including an integrated media player that allows files to be played directly. Built-in horizontal and vertical keystone correction provides freedom when positioning the projector. 249 cm image width, the projector will be able to illuminate well. However, if room light is available, the picture width should ideally not exceed 166 cm. The projector has Airplay, Miracast Screen Mirroring support, which enables direct playback of videos in high resolution and surround sound from smartphones, tablets and PCs with Android, Windows or iOS via WLAN. Another extra is that the Bluetooth function allows the projector to be connected to external wireless speakers. It is also Full HD 1080P and 4K (compressed) compatible.
Display Type	1 x LCD TFT Panel HDTV 16/9 Liquid Crystal Display
Projector Ansi-Lumen	600
Contrast	20000:1 full on/off
Black Level	0,0300 min. Lumen
Offset	-
Screen Ansi-Lumen	267 Lux (bei 200 cm Screen)
Contrast	20000:1 full on/off
Black Level	0,013 min. Lumen
Resolution	HDTV 1920 x 1080 2.073.600 Pixel UHD (4K2K) 3840 x 2160 compressed
Video Modes	Pal, SECAM, NTSC, HDTV 720p, 1080i, 1080p, 4K UHD (komprimiert), EDTV 480p, 576p **Media player formats:** Excel/Word/PDF
Application	Micro-Portabel | Small mobile presentations.. Small screen width, rooms with very little ambient light below 100 lumens.
Light Source	LED
Light Life	120000 h.
Operating Costs	0,00 € LED
Focus	Powered
Zoom	No Zoom
Objective	-
Throw Ratio	-
Audio	1 x 12W
Connections	HDMI in USB in Audio Mini Jack out Bluetooth 5.2
Ceiling Mounting	-

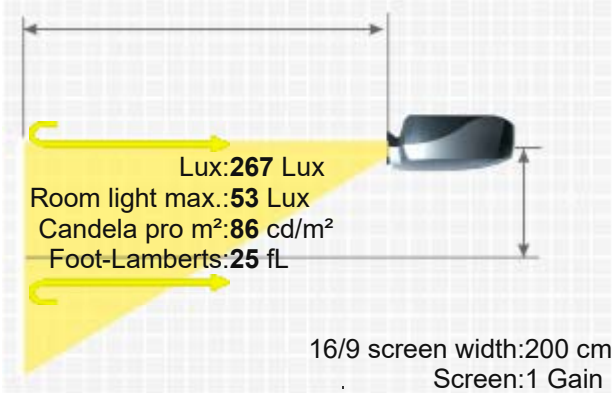

SOVBOI VB2

Power	-
Size WxHxD	177,8 x 76,2 x 177,8 mm (7"x3"x7") 2,38 L/dm³
Operating Noise	-
Weight	1,36 kg / 2,2 lbs.
Keystone	Vert.: +/-50° Hori.: +/-50°
Illumination	-
Frequenz	-
Foot-Lamberts	25 fL / max. 249 cm screen width 86 cd/m²
Features	■ Full HD 1080P compatible ■ Integrated Mediaplayer ■ Wi-Fi network compatible.
Status	2023 Current model // Last update of the data: 2024-10-02
Data	
More Details	HCinema https://www.projector-database.com/pro/sovboivb2-en.html

Due to our ongoing commitment to continuously improve the quality of our projector database, this brochure is also subject to change without notice. HCinema is not responsible for any errors or omissions contained in product descriptions.