SIM2 Data Grahics (SDG) 700

Display Type	 7" ESF CRT Röhre 4/3 Elektrostatisch Fokussierte Röhre		
Ansi-Lumen	Projector 160	Screen	53 Lux (bei 200 cm Screen)
Contrast	-		-
Black Level	-		-
Offset	-		
Resolution	-		
Video Modes	NTSC, PAL, SECAM Pal 60 NTSC 4,43 HDTV		
Application	CRT Projection | Very narrow picture width and rooms with very little light.		
Light Source	CRT Röhre		
Light Life	ca. 10000 - 20000 h. (je nach Anwendung)		
Operating Costs	-		
Focus	Manual		
Zoom	No Zoom		
Objective	HD 145		
Throw Ratio	-		
Audio	-		
Connections	5 x BNC RGBHV in		
Ceiling Mounting	Yes		
Power	-		
Size WxHxD	-		
Operating Noise	-		
Weight	-		
Keystone	-		
Illumination	-		
Frequenz	-		
Foot-Lamberts	5 fL / max. 110 cm screen width 17 cd/m²		
Features	-		
In Test	-		
Status	- Discontinued (EOL) // Last update of the data: 2023-08-04		
Data			

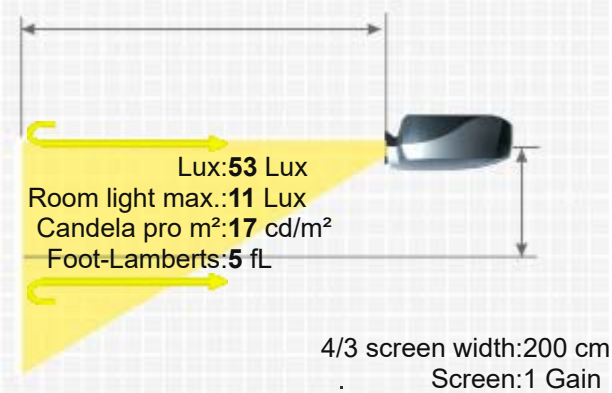

More Details

HCinema
https://www.projector-database.com/pro/sim2sdg700-en.html

Due to our ongoing commitment to continuously improve the quality of our projector database, this brochure is also subject to change without notice. HCinema is not responsible for any errors or omissions contained in product descriptions.

SIM2 DATA GRAHICS (SDG) 700