Sharp XV 3300E/U



SHARP XV 3300E/U

Brief Introduction Beta 2.5	The XV 3300E/U LCD has 522 Ansi lumens, a contrast of 100:1 and a VGA 640 x 480 resolution. As Sharp specifies the brightness of the projector in lumens, we have calculated an approximate Ansi lumen value in this case. The projector will be able to illuminate a picture width of 199 cm well. However, if room light is available, the picture width should ideally not exceed 133 cm. The model is no longer offered by Sharp. It should also be noted that there are unfortunately no longer any replacement lamps available for the projector, neither originals nor replicas.	
Display Type	3 x LCD TFT Panel VGA 4/3 Liquid Crystal Display	
Ansi-Lumen	Projector: 522 600 Lumen	Screen: 169 Lux (bei 203 cm Screen)
Contrast	Projector: 100:1 full on/off	Screen: 100:1 full on/off
Black Level	Projector: 5,2200 min. Lumen	Screen: 1.742 min. Lumen
Offset	-	
Resolution	VGA 640 x 480 307.200 Pixel	
Video Modes	NTSC, PAL, SECAM	
Disc Recognition	DVD (komprimiert) | ~~HD Blu-ray~~ | ~~3D Blu-ray~~ | ~~4K UHD Blu-ray~~	
Application	Homeciname | Very narrow picture width and rooms with very little light.	
Light Source	250W Metalldampf Lamp Articel Nr.: CLMPF0019DE01	
Light Life	2000 h.	
Operating Costs	-	
Focus	Powered	
Zoom	Powered	
Objective	-	
Throw Ratio	-	
Audio	-	
Connections	2 x S-Video: (1) Mini DIN 4-pin Video: per BNC Stereo Chnich 2 x in 1 x out 4 x BNC RGBH und V DC12V out	
Ceiling Mounting	-	
Power	-	
Size WxHxD	-	

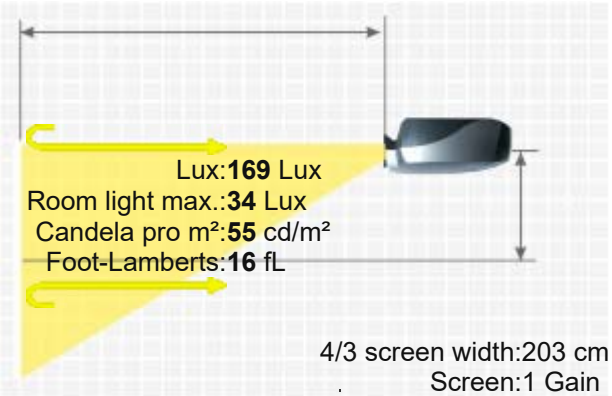

Operating Noise	-
Weight	-
Keystone	-
Illumination	-
Frequenz	-
Foot-Lamberts	16 fL / max. 199 cm screen width 55 cd/m²
Features	-
In Test	-

Optional		
	Bulb only original	CLMPF0019DE01
	Lamp original	BQC-XG3850E/1

Order here: https://www.hcinema.de/lampen/shop-en.php?id=3732

Status - Discontinued (EOL) // Last update of the data: 2024-06-04

Data




More Details

https://www.projector-database.com/pro/sharpxv3300e-en.html

Due to our ongoing commitment to continuously improve the quality of our projector database, this brochure is also subject to change without notice. HCinema is not responsible for any errors or omissions contained in product descriptions.