EIKI

EK-50LU series
Quick Start Guide

1

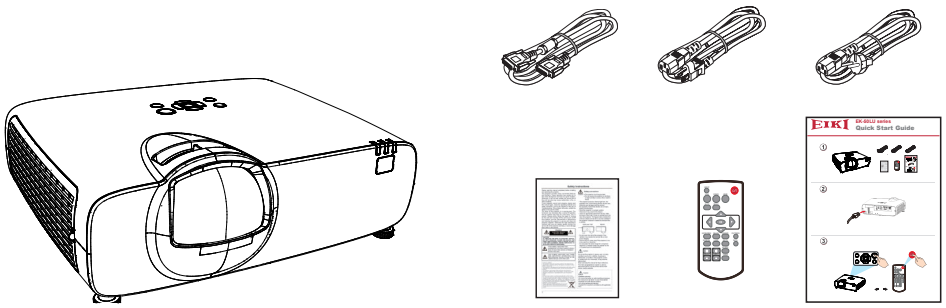

2

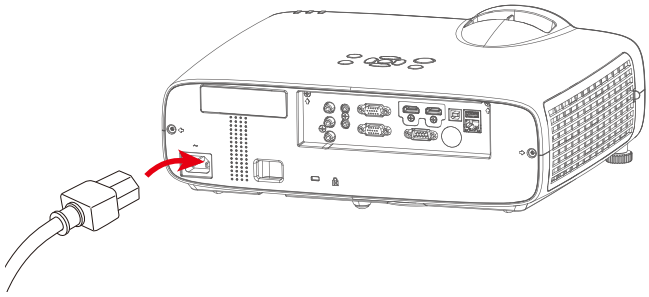

3

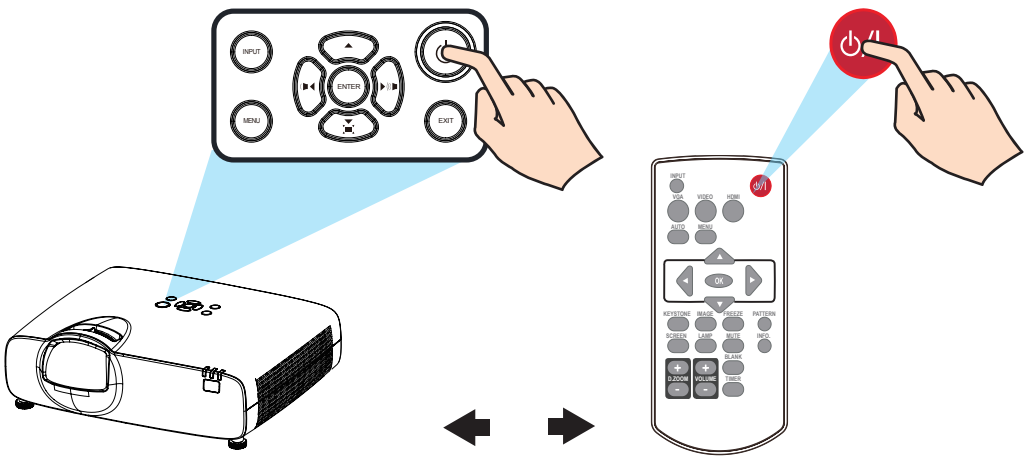

EIKI

EK-50LU series
Quick Start Guide

4

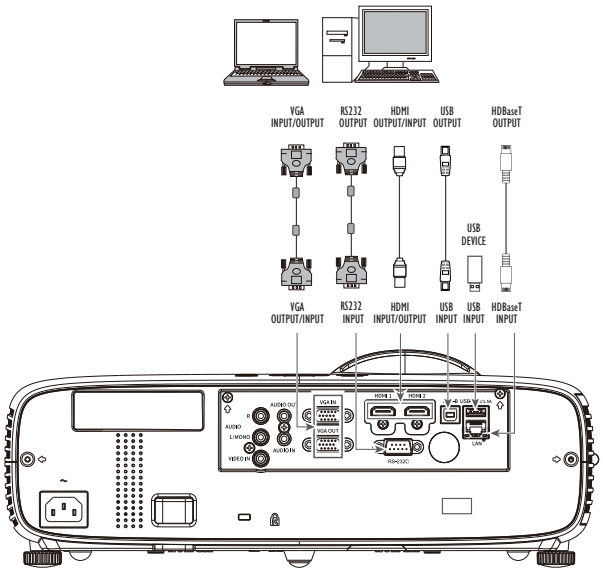

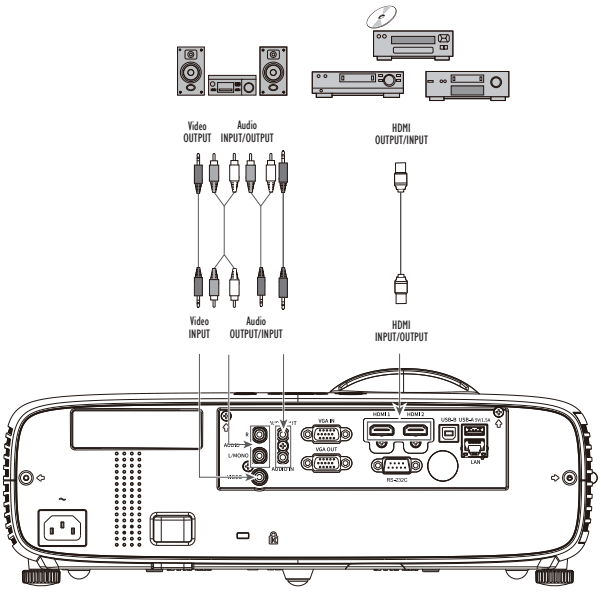

5

- [x] VGA
- [ ] HDMI 1
- [ ] HDMI 2
- [ ] Memory Viewer
- [ ] Network
- [ ] USB Display

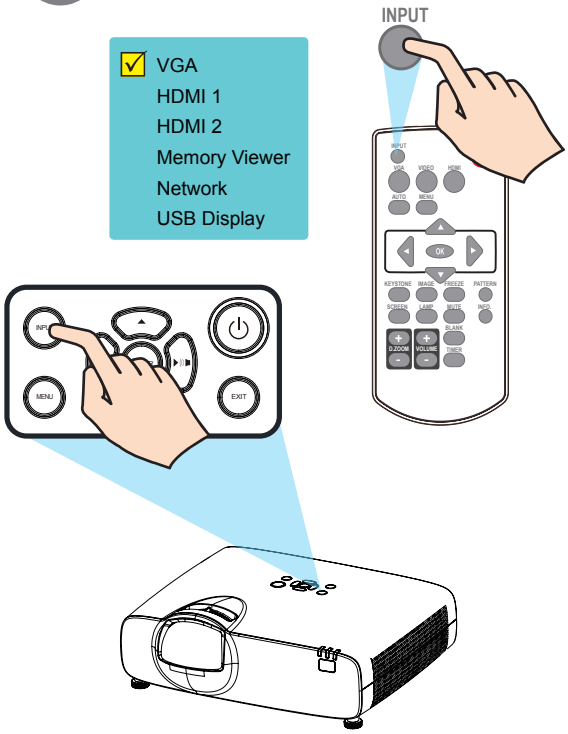

6

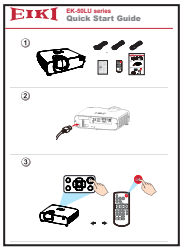

https://global.eiki.com

U.S.A. / Canada

EIKI International, Inc.
22552 Avenida Empresa Rancho Santa Margarita, CA 92688 U.S.A.
Tel: +1-800-242-3454
+1 949-742-6800
E-Mail: usa@eiki.com

China

EIKI (Shanghai) Co., Ltd.
LAKESIDE OASIS MIDDLE RING BUSINESS CENTER Block 1,
Room 606, 1628, Jin Sha Jiang Road
Shanghai, 200333, CHINA
Tel: +86 21-3251-3993
Service Hot line: +86 21-3251-3995
Fax: +86 21-3251-3997
E-mail: info@eiki-china.com

South East Asia

EIKI International Sdn Bhd
E-01-03, Sekitar 26 Enterprise,
Persiaran Hulu Selangor, Seksyen 26,
40400 Shah Alam, Selangor Darul Ehsan, Malaysia
Tel: +60 3-6157-9330
Fax: +60 3-6157-1320
E-Mail: sales@eiki.my

Oceania

EIKI AUSTRALIA PTY LTD
Level 5, 11 Queens Road,
Melbourne, Victoria 3004, Australia
Tel: +61 03-8530-7048
Fax: +61 03-9820-5834
E-Mail: sales@eiki.net.au

Worldwide

EIKI JAPAN Co,LTD
202 2-162-1 Higashisonoda,
Amagasaki-shi, Hyogo 6610953
Japan
Tel: +81 06-6499-8865
E-Mail: info@eiki-japan.info