Boxlight BOXi T-200



Pocket

Brief Introduction Beta 2.5	The Game-Portabel Boxlight BOXi T-200 DLP projector has 150 Ansi lumens, a contrast of 1000:1 and a WXGA 1280 x 800 resolution. Thanks to the brightness of 150 Ansi lumens, a picture width of 124 cm is possible. In room light, the picture should be max. 83 cm wide. On the market since 2014, the model is no longer offered by the manufacturer Boxlight.
Display Type	1 x DLP Chip WXGA 16/10 Ti Digital Light Processing Chip
Ansi-Lumen	Projector: 150 / Screen: 60 Lux (bei 200 cm Screen)
Contrast	Projector: 1000:1 full on/off / Screen: 1000:1 full on/off
Black Level	Projector: 0,1500 min. Lumen / Screen: 0,06 min. Lumen
Offset	-
Resolution	WXGA 1280 x 800 1.024.000 Pixel
Video Modes	-
Application	Game-Portabel | Very portable, small-screen projections. Very narrow picture width and rooms with very little light.
Light Source	-
Light Life	-
Operating Costs	-
Focus	Manual
Zoom	No Zoom
Objective	F=2,04 f=9,05mm
Throw Ratio	-
Audio	1W Mono
Connections	HDMI 1.4b
Ceiling Mounting	Yes
Power	36 / 25W
Size WxHxD	95 x 36 x 153 mm (3,7"x1,4"x6") 0,52 L/dm³
Operating Noise	39 / 37 dB in Eco Mode
Weight	0,300 kg / 0,66 lbs.
Keystone	-
Illumination	-
Frequenz	-
Foot-Lamberts	6 fL / max. 124 cm screen width 21 cd/m²
Features	■ Eco Mode
Status	2014 Discontinued (EOL) // Last update of the data: 2023-08-04
Data	Created: 2014-01-24 16:04:18

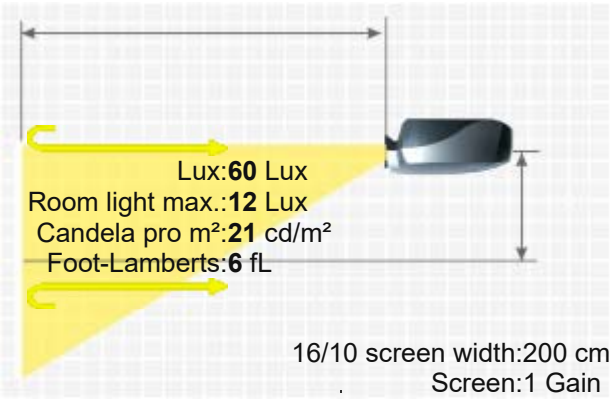

BOXLIGHT BOXI T-200

More Details

HCinema

https://www.projector-database.com/pro/boxlightboxit200-en.html

Due to our ongoing commitment to continuously improve the quality of our projector database, this brochure is also subject to change without notice. HCinema is not responsible for any errors or omissions contained in product descriptions.