Asus P1



Brief Introduction Beta 2.5	A brief introduction to the P1: The Asus Game-Portable LED DLP projector offers 200 Ansi-Lumen, a contrast of 2000:1 and a WXGA 1280 x 800 resolution. Thanks to the LEDs, the projector has a light life of up to 30,000 hours, which equates to over 20.5 years at 4 hours of use. 144 cm image width, the projector will be able to illuminate well. If room light is available, however, the picture width should ideally not exceed 96 cm. The projector is very quiet compared to other projectors with an operating noise of 28 decibels. This model is no longer offered by Asus.
Display Type	1 x 0,45" DLP Chip WXGA 16/10 Ti Digital Light Processing Chip
Ansi-Lumen (Projector)	200
Contrast (Projector)	2000:1 full on/off
Black Level (Projector)	0,1000 min. Lumen
Offset	
Screen	80 Lux (bei 200 cm Screen) 2000:1 full on/off 0,04 min. Lumen
Resolution	WXGA 1280 x 800 1.024.000 Pixel
Video Modes	PAL, SECAM, NTSC,
Application	Game-Portabel | Very portable, small-screen projections. Very narrow picture width and rooms with very little light.
Light Source	R/G/B LED
Light Life	30000 h.
Operating Costs	0,00 € LED
Focus	-
Zoom	No Zoom
Objective	-
Throw Ratio	1,16:1
Audio	-
Connections	D-sub 15 pin in S-Video in Cinch Video in
Ceiling Mounting	-
Power	-
Size WxHxD	125,5 x 33,5 x 130 mm (4,9"x1,3"x5,1") 0,54 L/dm³
Operating Noise	28dB
Weight	0,415 kg / 0 lbs.

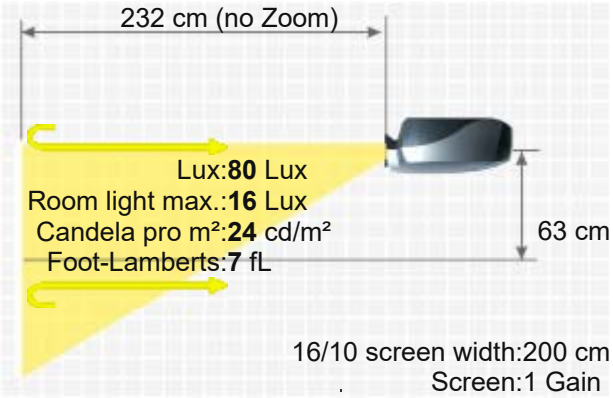



ASUS P1

Keystone	Vert.: +/-30°
Illumination	-
Frequenz	H-sync: 31-79 kHz V-sync: 56-75 Hz
Foot-Lamberts	7 fL / max. 144 cm screen width 24 cd/m²
Features	-
Status	2011 Discontinued (EOL) // Last update of the data: 2024-10-02

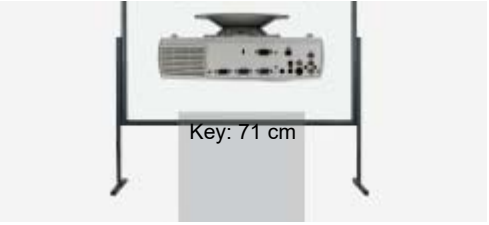

Data




More Details

HCinema

https://www.projector-database.com/pro/asusp1-en.html

Due to our ongoing commitment to continuously improve the quality of our projector database, this brochure is also subject to change without notice. HCinema is not responsible for any errors or omissions contained in product descriptions.