AAXA M1 Plus



< 30 dB Leise | Media Player | LED

Brief Introduction Beta 2.5	The AAXA M1 Plus model is an LED projector with SVGA 800 x 600 resolution and a contrast of 1000:1. The manufacturer states an LED service life of 15000 hours, which is over 10.3 years if enjoyed for four hours a day. The projector is equipped with an integrated media player, so direct playback of files will not be a problem. A picture width of up to 71 cm is possible. However, the image should be smaller in room light. We recommend max. 47 cm. The projector can be operated for up to 1 hour using the rechargeable battery, so it can be set up spontaneously and easily anywhere. At just 22 decibels, the device is one of the quieter projectors. This model is no longer offered by AAXA.
Display Type	[redacted] -
Ansi-Lumen	Projector: 66 / Screen: 21 Lux (bei 203 cm Screen)
Contrast	Projector: 1000:1 full on/off / Screen: 1000:1 full on/off
Black Level	Projector: 0,0660 min. Lumen / Screen: 0.021 min. Lumen
Offset	-
Resolution	SVGA 800 x 600 480.000 Pixel
Video Modes	PAL, SECAM, NTSC **Media player formats:** AVI/MP4/MP3/RMVB/RM/DAT/JPEG
Application	Game-Portabel | Very portable, small-screen projections. Very narrow picture width and rooms with very little light.
Light Source	LED
Light Life	15000 h.
Operating Costs	0,00 € LED
Focus	Manual
Zoom	No Zoom
Objective	-
Throw Ratio	-
Audio	-
Connections	-
Ceiling Mounting	Yes
Power	30W
Size WxHxD	-
Operating Noise	22dB
Weight	-
Keystone	-
Illumination	-
Frequenz	-
Foot-Lamberts	2 fL / max. 71 cm screen width 7 cd/m²
Features	■ Integrated Mediaplayer ■ 1 Std.

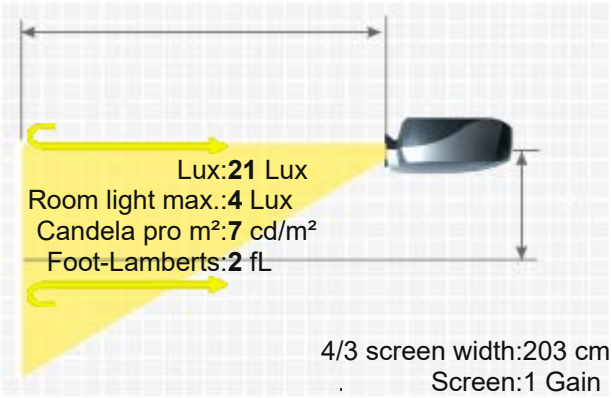

AAXA M1 PLUS

Status 2010 Discontinued (EOL) // Last update of the data: 2023-10-17
Data

More Details



HCinema
https://www.projector-database.com/pro/aaxam1plus-en.html

Due to our ongoing commitment to continuously improve the quality of our projector database, this brochure is also subject to change without notice. HCinema is not responsible for any errors or omissions contained in product descriptions.